PFE300·500 SERIES
Instruction Manual

BEFORE USING THE POWER SUPPLY UNIT

Be sure to read this instruction manual thoroughly before using this product. Pay attention to all cautions and warnings before using this product. Incorrect usage could lead to an electrical shock, damage to the unit or a fire hazard.

⚠ WARNING

- Do not make unauthorized changes to power supply unit, otherwise you may have electric shock and void your warranty.
- Do not touch this unit and the internal components in operation or shortly after shut down. They may have high voltage or high temperature and as the unit dissipates its heat so the surface of the unit is hot. You may receive electric shock or burn.
- When the unit is operating, keep your hands and face away from it; you may be injured by an accident
- Do not use unit under unusual condition such as emission of smoke or abnormal smell and sound etc. It might cause fire and electric shock. In such case, please contact us; do not repair by yourself, as it is dangerous for the user.
- Do not drop or insert anything into unit. It might cause failure and fire.
- Do not operate these units under condensation condition. It may cause fire and electric shock.

⚠ CAUTION

- As a component part, compliance with the standard will be based upon installation in the final application. This product must be installed in a restricted access location, accessible to authorized competent personnel only. These AC to DC converters have reinforced insulation between the input and the output. The outputs of these products are energy hazards. All models with an output greater than 28V model are considered to be non-SELV. As such, the instructions for use must refer to these energy hazardous outputs and Non-SELV outputs in that the outputs must not be accessible to the operator. The installer must also provide protection against inadvertent contact by a service engineer.
- The equipment has been evaluated for use in a Pollution Degree 2 environment.
- This power supply is primarily designed and manufactured to be used and enclosed in other equipment.
- Confirm connections to input/output terminals and signal terminals are correct as indicated in the instruction manual.
- Attach a HBC external fuse to each module to ensure safety operation and compliance to each safety standard approval. The recommended input fuse rating within the instructions is as follows: -15AHBC, 250V fast acting fuse. The breaking capacity and voltage rating of this fuse may be subject to the end use application.
- Input voltage, Output current, Output power, ambient temperature and ambient humidity should be used within specifications, otherwise the unit will be damaged.
- For application equipment, which requires very high reliability (Nuclear related equipment, traffic control equipment, medical equipment, etc.), please provide fail safety function in the equipment.
- Do not use the product in environment with strong electromagnetic field, corrosive gas and conductive substance.
- Do not operate and store this unit at an environment where condensation occurs. In such case, waterproof treatment is necessary
- Never operate the unit under over current or shorted conditions for 30 seconds or more and out of Input Voltage Range as specification. Insulation failure, smoking, burning or other damage may occur to the unit.
- The output voltage of this power supply unit is considered to be a hazardous energy level (The voltage is 2V or more and the electric power is 240VA or more). Prevention from direct contact with output terminal is highly necessary. While installing or servicing this power supply unit, avoid dropping tools by mistake or direct contact with output terminal. This might cause an electrical shock. While repairing this power supply unit, the AC input power must be switched off and the input and output voltage should be level.
- To maintain the SELV output for outputs less than 28VDC, under fault conditions, the output must be connected to earth in the final application.
- The application circuits and their parameter are for reference only. Be sure to verify effectiveness of application circuits and their parameters before finalizing circuit design.
- Do not inject abnormal voltage to output terminal and signal terminal from the outside. The injection of reverse voltage or over voltage exceeding nominal output voltage to output terminals might cause damage to internal components.
- This information in this document is subject to change without prior notice. For actual design-in, please refer to the latest publications of data sheet, etc., for the most up-to date specifications of the unit.
- No part of this document may be copied or reproduced in any form without prior written consent of Densei-Lambda.

Note : CE MARKING

CE Marking when applied to a product covered by this handbook indicates compliance with the low voltage directive (73/23/EEC) as modified by the CE Marking Directive (93/68/EEC) in that it complies with EN60950.

DWG. No. : C212-04-11B		
APPD	CHK	DWG
Kurosawa 18. May '07	Y. Kikawa 18. May. '07	M. Habara 18. May. '07

Table of Contents

■ Brief Product Explanation
■ Block Diagram
■ Sequence Time Chart
■ Terminal Explanation
■ Explanation on Specifications
1. Input Voltage Range
2. Output Voltage Adjustment Range
3. Maximum Output Ripple and Noise
4. Maximum Line Regulation
5. Maximum Load Regulation
6. Over Current Protection (OCP)
7. Over Voltage Protection (OVP)
8. Over Thermal Protection (OTP)
9. Remote Sensing (+S, -S Terminals)
10. Series Operation
11. Power ON Signal (ENA Terminal)
12. Operating Ambient Temperature Range
13. Operating Ambient Humidity
14. Storage Ambient Temperature
15. Storage Ambient Humidity
16. Cooling Method
17. Withstand Voltage
18. Insulation Resistance

■ Before concluding module damage

Brief Product Explanation

PFE300,500 is an AC-DC power module with built-in AC input voltage booster PFHC (Harmonics Current Limiter and Power Factor Correction Circuit) and DC/DC converter functions within the same single package.

In the PFHC circuit, Power Factor Correction is performed within the AC input voltage range (85 to 265VAC). In the DC/DC converter circuit, stable output voltage (12, 28, 48VDC) is supplied.

Since this product is an industry standard full-brick size module, construction of AC/DC converter can be adequately realized with only one space-efficient module.

Block Diagram

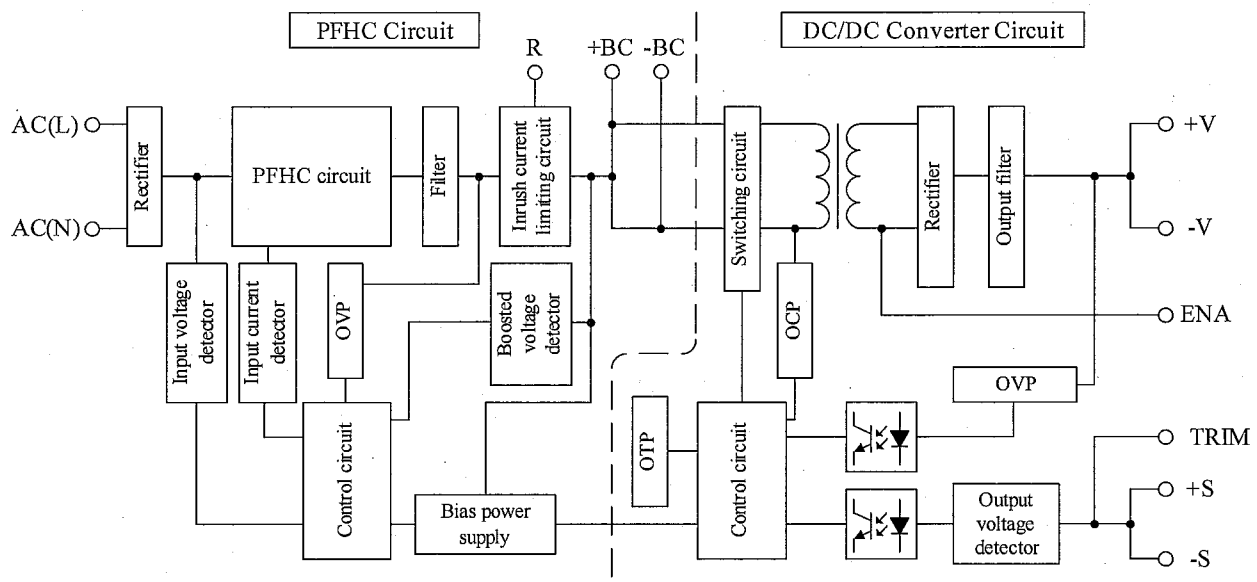

Switching Frequency

PFHC circuit (fixed) : 100kHz

DC/DC converter (fixed) : 230kHz (primary), 460kHz (secondary)

Sequence Time Chart

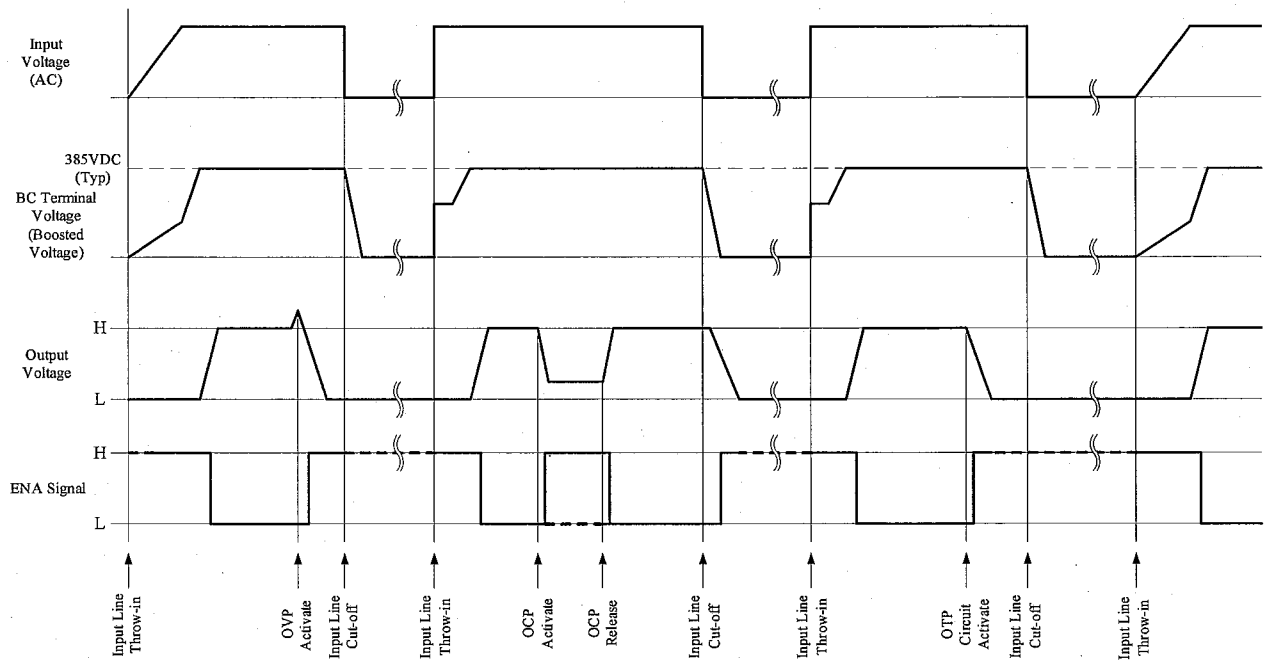

Note : This product has no remote ON/OFF function.

■Terminal Explanation

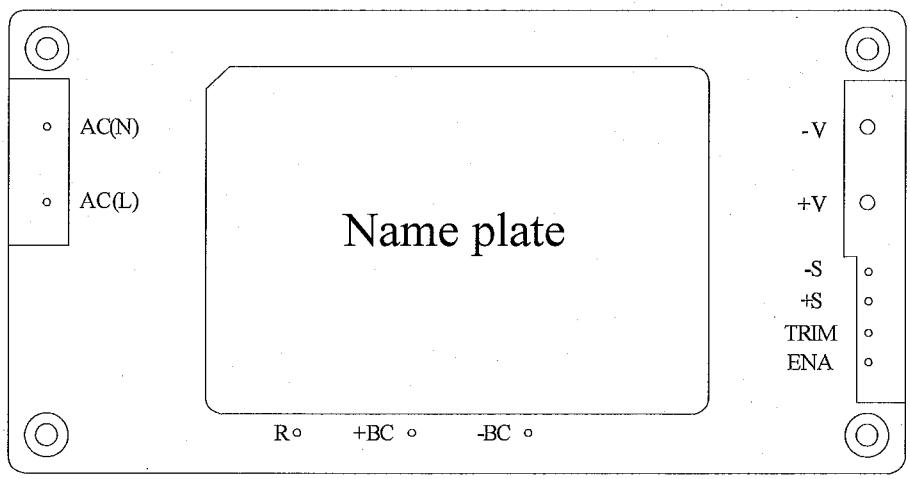

	[Input side terminals]		[Output side terminals]
AC (L)	: Input terminal live line	+V	: +Output terminal
AC (N)	: Input terminal neutral line	-V	: -Output terminal
+BC	: +Boosted voltage terminal	+S	: +Remote sensing terminal
-BC	: -Boosted voltage terminal	-S	: -Remote sensing terminal
R	: External inrush current limiting resistor	TRIM	: Output voltage trimming terminal
		ENA	: Power on signal terminal

- Baseplate can be connected to FG through M3 mounting tapped holes.
- Consider contact resistance when connecting AC (L), AC (N), R, +BC, -BC, +V, -V.
- Note that +BC and -BC terminals is a primary voltage with high voltage (385VDC).
  Do not connect load from these terminals.

■Explanations on Specifications:

1. Input Voltage Range

Input voltage range is indicated below. Take care not to apply input voltage which is out of this specified range nor should a DC input voltage be applied as this would result into power module damage.

Input Voltage Range : Single Phase 85 to 265VAC Line Frequency Range : 47 to 63Hz

● **Basic Connection**

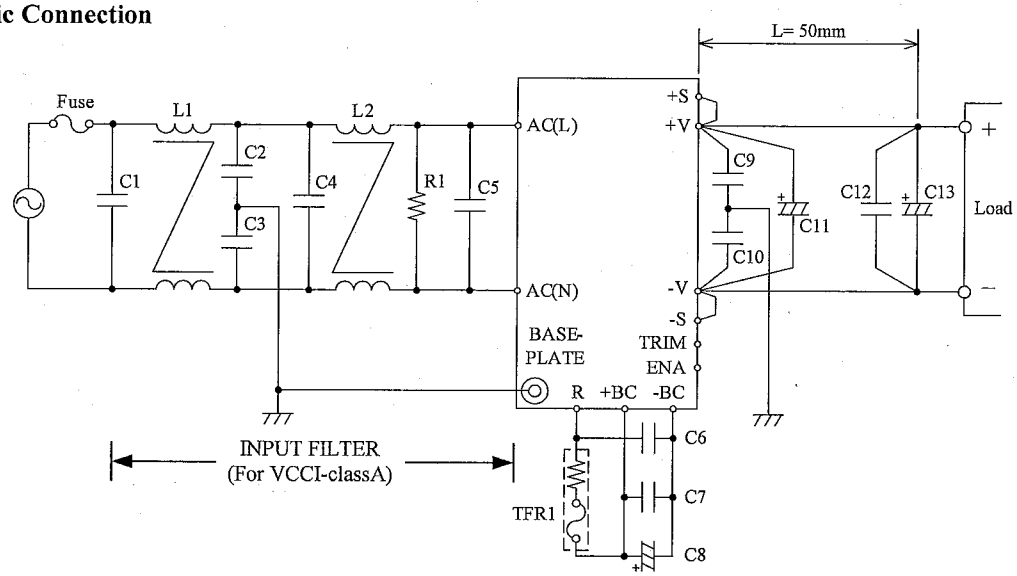

Fig. 1-1 Basic Connection

External Input Fuse

This power module has no internal fuse. Use external fuse to acquire each Safety Standard and to further improve safety. Further, Fast-Blow type fuse must be used per one module. Also, in-rush surge current flows during line throw-in. Be sure to check I^2t rating of external switch and external fuse.

Recommended External Fuse : 15A

Select fuse based on rated voltage, rated current and surge current capability.

(1) Voltage Ratings
100VAC line : AC125V
200VAC line : AC250V

(2) Current Ratings

Rated current is determined by the maximum input current based on operating conditions and can be calculated by the following formula.

$$Iin(max)=\frac{Pout}{Vin\times Eff\times PF}(Arms) \quad \text{(Formula 1-1)}$$

Iin (max)	:	Maximum Input Current
Pout	:	Maximum Output Power
Vin	:	Minimum Input Voltage
Eff	:	Efficiency
PF	:	Power Factor

For Efficiency and Power Factor values, refer to separate document "PFE300 Series Evaluation Data" or "PFE500 Series Evaluation Data".

C1, C4, C5 : 1uF (Film Capacitor)

Ripple current flows through this capacitor. When selecting capacitor, be sure to check the allowable maximum ripple current rating of this capacitor. Verify the actual ripple current flowing through this capacitor by doing actual measurement.

Recommended Voltage Rating : 250VAC

Note) Connect C5 as near as possible towards the input terminals of this power module.

L1, L2 : 6mH

Add common mode choke coil as EMI/EMS countermeasure. When using multiple modules, connect coil to each module.

Note) Depending on the input filter used, noise might increase or power module might malfunction due to filter resonance.

C2, C3 : 4,700pF (Ceramic Capacitor)

Add ceramic capacitor as EMI/EMS countermeasure. Be sure to consider leakage current of your equipment when adding this capacitor.

High withstand voltage are applied across this capacitor depending on the application. Select capacitors with high withstand voltage rating.

R1 : 470kΩ

Connect bleeder resistor across AC(L) and AC(N) terminals.

C6, C7 : 1uF (Film Capacitor)

Ripple current flows through this capacitor. When selecting capacitor, be sure to check the allowable maximum ripple current rating of this capacitor. Verify the actual ripple current flowing through this capacitor by doing actual measurement.

Recommended Voltage Rating : 450VDC

Note) Select Capacitor with more than 3A (rms) rating. Connect C6, C7 as near as possible towards the output terminals of this power module.

C8 : Electrolytic Capacitor

PFE300 : 470uF x 1

PFE500 : 390uF x 2 pcs. in parallel

Refer to "Selection Method of External Bulk Capacitor for Boost Voltage" below.

Allowable External Capacitance at nominal capacitor value is shown below.

Recommended Voltage Rating : 450VDC

Recommended Total Capacitor : 390uF to 1,200uF

Note) 1. Do not connect capacitors with more than the above capacitance value as this would result into power module damage.

2. When using module below -20℃ ambient temperature, AC ripple of boost voltage, output ripple voltage and start up characteristics might be affected by ESR characteristics of the bulk capacitors.
Therefore, be sure to verify characteristics by actual evaluation.

C9, C10 : 0.033uF

Connect ceramic or film capacitor as EMI/EMS countermeasure and to reduce spike noise.

Note) High Voltage is applied across this capacitor during withstand voltage test depending on the application.
Connect C9, C10 as near as possible towards the output terminals of this power module.

C11 : Refer to Table 1-1

To reduce output ripple noise voltage, connect electrolytic capacitors across +V and -V.

Note) Connect C11 as near as possible to the +V and -V output terminals of this power module.

Vout	C11
12V	25V 1,000uF
28V	50V 470uF
48V	100V 220uF

Table 1-1 C11 : Recommended external capacitance

C12 : 2.2uF

Connect chip ceramic capacitor within 50mm from the output terminals +V and -V of the power module to reduce output spike noise.

Also, note that output spike voltage may vary depending on the wiring pattern of the printed circuit board.

C13 : Refer to Table 1-2

Connect C13 within 50mm from the output terminals +V and -V of the power module to stabilize operation.

Note that the output ripple and line turn off characteristics of the power module might be affected by the ESR and ESL of the electrolytic capacitor.

Also, note that output ripple voltage may vary depending on the wiring pattern of the printed circuit board.

Sudden change in output voltage due to sudden load change or sudden input voltage change can be reduced by increasing external output capacitor value.

Vout	C13
12V	25V 1,000uF
28V	50V 470uF
48V	100V 220uF

Table 1-2 C13 : Recommended external capacitance

Note) 1. Use low-impedance electrolytic capacitors with excellent temperature characteristics.
(Nihon Chemi-con LXY Series or equivalent)
(Nichicon PM Series or equivalent)

2. For module operation at ambient temperature -20℃ or less, output ripple voltage might be affected by ESR characteristics of the electrolytic capacitors. Increase the capacitor values shown in Table 1-1 and 1-2 according to the table below.

Vout	C11, C13
12V	25V 1,000uF x 2 parallel
28V	50V 470uF x 2 parallel
48V	100V 220uF x 2 parallel

Table 1-3
C11, C13 : Recommended external capacitance (Ambient Temperature < -20℃)

3. Take note of the maximum allowable ripple current of the electrolytic capacitor used. Especially, for sudden load current changes, verify actual ripple current and make sure that allowable maximum ripple current is not be exceeded.

● Selection Method of External Bulk Capacitor for Boost Voltage

Boost voltage bulk capacitor is determined by boost voltage ripple voltage, ripple current and hold-up time.

Select capacitor value such that boost voltage ripple voltage does not exceed 15Vp-p.

Note) When ambient temperature is -20℃ or less, Boost voltage might increase due to ESR characteristics. Therefore, verify above characteristics by actual evaluation.

For output hold-up time, refer to separate document "PFE300 Series Evaluation Data" or "PFE500 Series Evaluation Data" and use appropriate capacitor up to 1,200uF maximum. (It is recommended that verification should be done through actual evaluation).

For allowable ripple current value, refer to Fig. 1-2 and select a capacitor with higher ripple current rating.

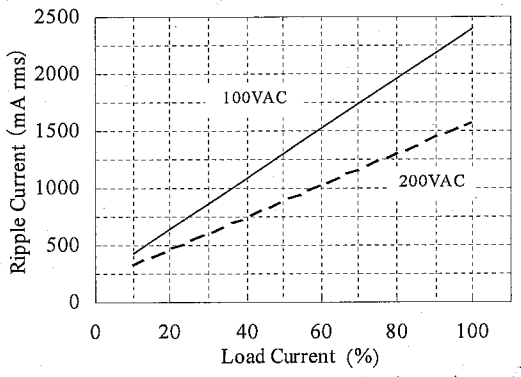

Fig. 1-2 Allowable ripple current value

TFR1 : 10 to 100Ω

By connecting thermal fuse resistor across R and +BC terminals as shown in Fig. 1-1 , in-rush current during line throw-in can be suppressed. Failures due to in-rush current such as melting of external fuse, welding of relay or switch connecting joints or shutdown of No-Fuse Breakers (NFB) can occur. Therefore, be sure to connect this external thermal fuse resistor.

Note that this module will not operate without this external resistor.

●Selection Method of External Resistor

(1) Calculating Resistance Value for TFR1

Resistance can be calculated by the formula below.

$$R = \frac{Vin}{Irush} (\Omega) \qquad \text{(Formula 1-2)}$$

R : Resistance Value for External TFR1
Vin : Input Voltage converted to DC value
=Input Votlage (rms) x $\sqrt{2}$
Irush : Input surge current value

(2) Required Surge Current Rating

Sufficient surge current withstand capability is required for external TFR1.

Required Surge Current Rating can be selected by I^2t. (Current squared multiplied by time)

$$I^2t = \frac{Co \times Vin^2}{2 \times R} (A^2s) \qquad \text{(Formula 1-2)}$$

I^2t : Current-squared multiplied by time
Co : Booster Voltage Bulk Capacitance
Vin : Input Voltage converted to DC value
=Input Voltage (rms) x $\sqrt{2}$
R : Resistance Value for External TFR1

2. Output Voltage Adjustment Range

Output Voltage can be adjusted within the range below by connecting fixed and variable resistors. However, take care not to exceed the output voltage range shown below because OVP function will activate.

Output Voltage Adjustment Range :
+/-20% of the typical voltage rating

When increasing output voltage, reduce output current so as not to exceed maximum output power.

Even if the output voltage is adjusted using external circuit shown in Fig. 2-1, remote sensing can be done. For details on Remote Sensing function, refer to "9. Remote Sensing".

Output Voltage Adjustment using Fixed and Variable Resistors

External resistor (R1) and variable resistor (VR) values, as well as, circuit connection is shown below.

For this case, remote programming of the output voltage can be done through the remote programming resistor VR.

Be sure to connect the remote programming resistor between +S and +V terminals.

	12V	28V	48V
R1	10k	47k	100k
VR	10k	20k	30k

unit : [Ω]

External Resistor : Tolerance +/-5% or less
Variable Resistor : Total Tolerance +/-20% or less
End Resistance 1% or less

Table 2-1
External Resistor and Variable Resistor Value
(For +/-20% Output Adjustment)

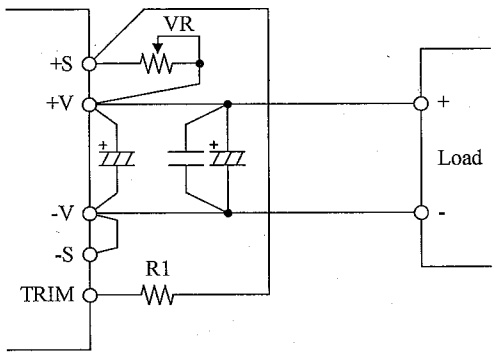

Fig. 2-1 External Resistor Connection Example

3. Maximum Ripple and Noise

This value is measured according to the description below in accordance with JEITA-9131A(Section 7.12 and Section 7.13).

In the basic connection shown in Fig. 1-1, additional connection shown in Fig. 3-1 is done for measurement. Capacitor (Ceramic Capacitor : 2.2μF and Electrolytic Capacitor : Refer to Table 1-2) must be connected within 50mm from the output terminals. Then, connect coaxial cable with JEITA attachment across the ceramic capacitor electrodes. Use 100MHz bandwidth oscilloscope or equivalent.

Also, note that output ripple voltage and output spike noise may vary depending on the wiring pattern of the printed circuit board.

In general, output ripple voltage and output spike noise can be reduced by increasing external capacitor value.

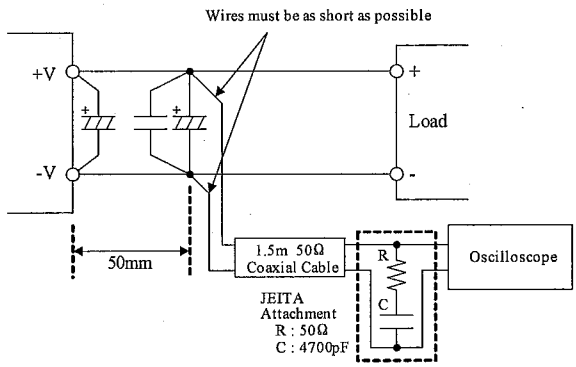

Fig. 3-1
Output Ripple Voltage (including Spike Noise) Measurement Method

4. Maximum Line Regulation

Maximum line regulation is defined as the maximum output voltage change when input voltage is gradually changed (Steady-State) within specification range.

5. Maximum Load Regulation

Maximum load regulation is defined as the maximum output voltage change when output load current is gradually changed (Steady-State) within specification range.

When using power module in dynamic load mode, audible sound could be heard from the power module or large output voltage change can occur. Make prior evaluation thoroughly before using this power module.

6. Over Current Protection (OCP)

This module is equipped with OCP function.

Output will automatically recover when short circuit or overload condition is removed. OCP value is fixed and cannot be adjusted externally.

Note that continuous short circuit or overload condition might result in power module damage.

7. Over Voltage Protection (OVP)

This module is equipped with OVP function. This value is set between 125% to 145% of nominal output voltage.

When the OVP function activates, first cut off input line and verify that boost voltage has dropped down to 20V or less. Then, recover output by recycling input line.

OVP value is fixed and cannot be set externally.

8. Over Temperature Protection (OTP)

This module is equipped with OTP function. This function will activate and shutdown the output when ambient temperature or internal temperature abnormally rises. OTP activates at following baseplate temperature.

PFE300-12, 28, 48 : 105 to 130℃
PFE500-12 : 90 to 115℃
PFE500-28, 48 : 105 to 130℃

When OTP function operates, output can be recovered by cooling down the baseplate sufficiently and letting the boost voltage drop down to 20V or less before recycling the input line.

9. Remote Sensing (+S, -S Terminals)

This module has remote sensing terminals to compensate for voltage line drop from the output terminals to the output load. When remote sensing is not required, (local sensing) short +S to +V and -S to -V terminals respectively.

Note that line drop (voltage drop due to wiring) compensation voltage range must be such that the output voltage is within the output voltage adjustment range and that the voltage between -V and -S must be within 2V.

Consider power loss due to line drop and use power module within the maximum allowable output power. Reduce the effect of noise to the remote sensing line by using a shield line, a twist pair, or a parallel pattern, etc.

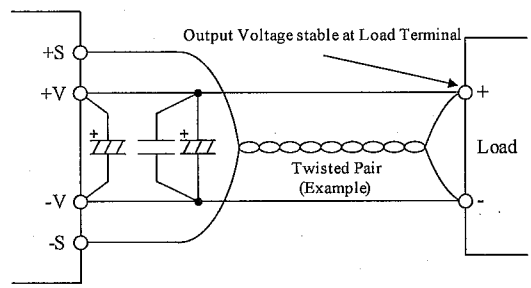

Fig. 9-1 Remote Sensing is used

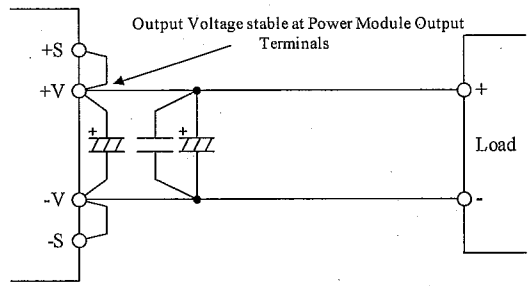

Fig. 9-2 Remote Sensing is not used (Local Sensing)

10. Series Operation

Series operation is possible for PFE300,500 Series. Connections shown in Fig. 10-1 and Fig. 10-2 are possible.

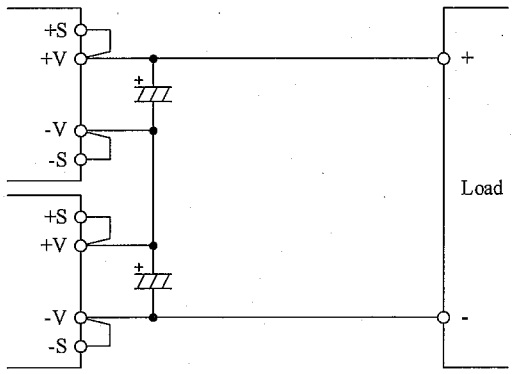

Fig. 10-1 Series Operation for High Output Voltage Applications

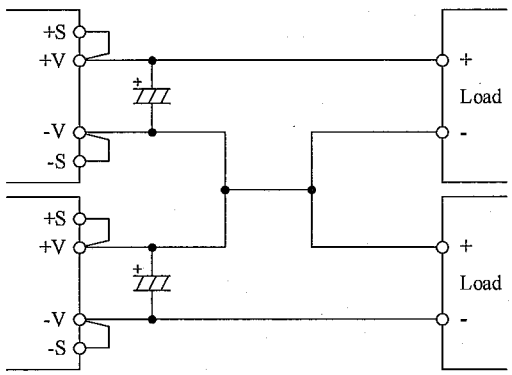

Fig. 10-2 +/-Output Series Applications

11. Power ON Signal (ENA Terminal)

This signal is located at the secondary side (output side) and is an open collector output.

(Maximum sink current is 10mA and maximum applied voltage is 75V.)

Return line for ENA terminal is the -V terminal.

When output voltage goes over a specified voltage level at start up, Power ON signal is "Low level".

Output voltage threshold level is as follows.

PFE300 or PFE500-12 : 9V (TYP)
PFE300 or PFE500-28 : 21V (TYP)
PFE300 or PFE500-48 : 37V (TYP)

On the other hand, output voltage threshold level for Power ON signal to turn high level at shutdown varies according to output condition. Therefore, be sure to do actual verification.

12. Operating Ambient Temperature Range

These products can be used in any orientation but be sure to consider enough airflow to avoid heat accumulation around the module. Consider surrounding components layout and set the PCB mounting direction such that air can flow through the heatsink by forced or convection cooling .

This product can operate at actual mounting condition when baseplate temperature is maintained at or below the following baseplate temperature:

PFE300-12, 28, 48 : 100℃
PFE500-12 : 85℃
PFE500-28, 48 : 100℃

Verify baseplate temperature at worst case operating condition at the measuring point shown in Fig. 12-1.

For Thermal Design details, refer to Application Notes "Thermal Design" section.

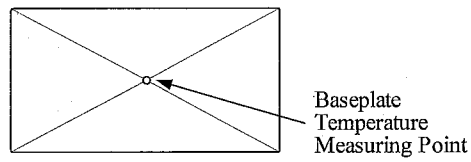

Fig. 12-1 Baseplate Measuring Point

Baseplate temperature range is limited according to Fig. 12-2.

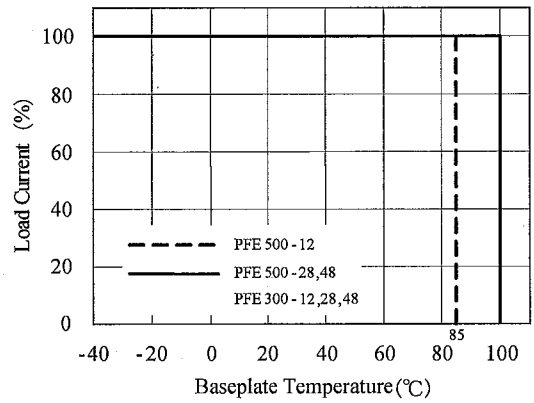

Fig. 12-2 Derating Curve

To further improve the reliability, it is recommended to use this module with baseplate temperature derating.

13. Operating Ambient Humidity

Note that dewdrop might cause power module abnormal operation or damage.

14. Storage Ambient Temperature

Note that rapid temperature change causes dewdrop causing harmful effect on soldering condition of the terminal pins.

15. Storage Ambient Humidity

Storage under high temperature and high humidity causes rust on terminal pins that causes deterioration of soldering conditions. Take enough caution when storing this module.

16. Cooling Method

For details of thermal design, refer to Application Notes "Thermal Design" section.

17. Withstand Voltage

This module is designed to withstand applied voltage 2.5kVAC between input and baseplate, 3kVAC between input and output for a duration of 1 minute. When doing this test during incoming inspection, set the current limit of test equipment to 20mA.

This module is designed to withstand applied voltage 1.5kVDC between output and baseplate for 1 minute. When doing this test during incoming inspection, be sure to apply DC voltage only. Avoid applying AC voltage during this test because this will damage the module.

Refrain from injecting high test voltage suddenly. Be sure to gradually increase the applied withstand voltage during testing and gradually reduce the voltage after the test.

Especially, when using timer switch of the test equipment, impulse voltage which is higher than the applied set voltage, is generated when the timer switch is cut off. This causes damage to the power module. Connect each terminal according to the circuit diagram shown below.

For basic connection shown in Fig. 1-1, do the same terminal connections.

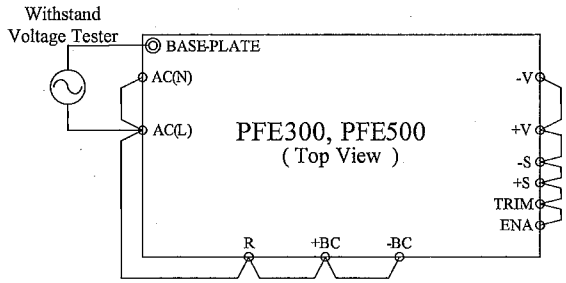

2.5kVAC 1 minute (20mA)
Fig. 17-1 Input to Baseplate Withstand Voltage Test Method

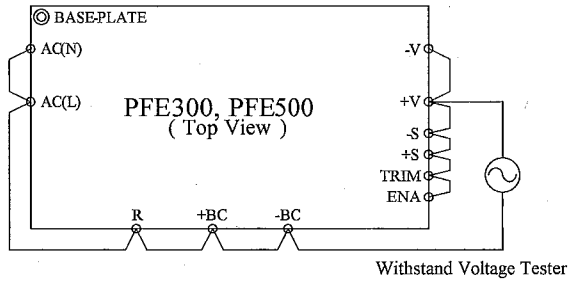

3kVAC 1 minute (20mA)
Fig.17-2 Input to Output Withstand Voltage Test Method

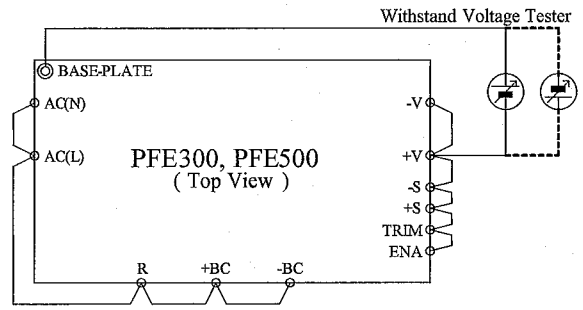

1.5kVDC 1 minute
Fig.17-3 Output to Baseplate Withstand Voltage Test Method

18. Insulation Resistance

Use DC Insulation Resistance test equipment (MAX.500V) between output and baseplate.

Insulation Resistance must be 100MΩ or more at 500VDC. Take caution that some types of test equipment generate high pulse voltage when switching applied voltage. After test, discharge this module using resistor, etc.

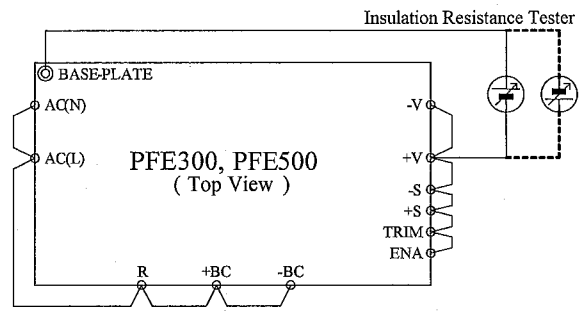

100MΩ or more at 500VDC
Fig. 18-1 Insulation Resistance Test Method

Before Concluding Power Module Damage

Verify following items before concluding power module damage.

1) No output voltage
- Is specified input voltage applied?
- During output voltage adjustment, is the fixed resistor or variable resistor setting correct?
- Is there no abnormality with the output load?
- Is the actual baseplate temperature within the specified operating temperature of this module?

2) Output voltage is high
- Are the remote sensing terminals (+S, -S) correctly connected?
- Is the measurement done at the sensing points?
- During output voltage adjustment, is the fixed resistor or variable resistor setting correct?

3) Output voltage is low
- Is specified input voltage applied?
- Are the remote sensing terminals (+S, -S) correctly connected?
- Is the measurement done at the sensing points?
- During output voltage adjustment, is the fixed resistor or variable resistor setting correct?
- Is there no abnormality with the output load?

4) Load regulation or line regulation is large
- Is specified input voltage applied?
- Are the input or output terminals firmly connected?
- Is the measurement done at the sensing points?
- Are the input and output wires too thin?

5) Large output ripple
- Is the measurement done according to methods described Application Notes or is it an equivalent method?