6-FMX Series

Front Terminal Battery

6-FMX-150D

Main Applications

- Telecom site
- Outdoor base station
- Floating operation site
- UPS

Benefits

- Front terminal design, easy access for faster installation and maintainence
- Optimal energy density, save floor space
- No leakage and no acid smog spray during the operation

Dimensions

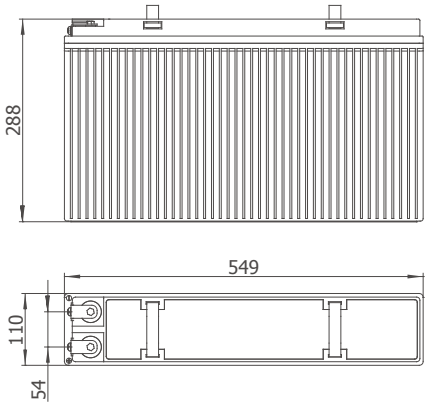

Technical Parameters

Nominal Voltage	12 V
Capacity	150 Ah @ 10hr to 1.80 V per cell @ 25˚C (77˚F)
Weight	43.5 kg(95.90 lbs)
Dimensions	Length: 549 mm (21.61in) Width: 110 mm (4.33 in) Height: 288 mm (11.34 in)
Internal Resistance (full charged)	4.0 m Ω
Short- circuit Current	2282 A
Self Discharge @25˚C(77˚F)	Less than 4% after 30 days storage
Operating Temperature Range	Discharge: -40˚C ～ 50˚C(-40˚F ～ 122˚F) Charge: -20˚C ～ 45˚C(-4˚F ～ 113˚F) Storage:-20˚C ～ 40˚C(-4˚F ～ 104˚F)
Recommended Operating Temperature	15˚C ～ 25˚C (59˚F ～ 77˚F)
Recommended Charging Current	30 A
Charging Voltage @25˚C(77˚F)	Float: 2.23 V/cell Equalize: 2.35 V/cell
Terminal	M6
Container Materials	ABS/ABS V0 (Optional)
Capacity Affected by Temperature(C_{10})	103% @ 40˚C(104˚F) 85% @ 0˚C(32˚F) 60% @ -20˚C(-4˚F)
Design Life @25°C(77˚F)	12 years

Certification

- ☑ ISO 9001: 2008
- ☑ ISO 14001: 2004
- ☑ GB/T 28001- 2011
- ☑ UL
- ☑ CE

Technical Features

- Excellent capacity retention rate
- Long life float service design
- Excellent over discharge recovery capability

HELIOS POWER SOLUTIONS

6-FMX Series

Front Terminal Battery

6-FMX-150D

Constant Current Discharge Characteristics Unit: A (25ºC, 77ºF)

F.V/Time	30min	1hr	2hr	3hr	4hr	5hr	6hr	8hr	10hr	12hr
1.70V	150.0	85.5	51.6	38.0	30.4	25.8	22.5	18.1	15.2	12.7
1.75V	141.9	82.7	51.0	37.8	30.2	25.7	22.3	18.0	15.1	12.6
1.80V	135.6	81.2	50.4	37.5	30.0	25.5	22.1	17.9	15.0	12.5
1.83V	131.0	77.9	49.8	37.3	29.8	25.3	22.0	17.8	14.9	12.4
1.85V	126.2	75.3	49.4	37.0	29.6	25.2	21.9	17.7	14.8	12.3

Constant Power Discharge Characteristics Unit: W/cell (25ºC, 77ºF)

F.V/Time	30min	1hr	2hr	3hr	4hr	5hr	6hr	8hr	10hr	12hr
1.70V	275.7	158.9	98.9	74.6	59.5	51.3	44.3	36.2	30.4	25.4
1.75V	263.7	156.0	98.3	74.4	59.4	51.1	44.0	36.0	30.2	25.3
1.80V	255.2	154.2	97.8	74.3	59.3	51.0	43.6	35.9	30.1	25.2
1.83V	249.5	149.0	97.1	74.0	59.2	50.9	43.3	35.8	30.0	25.1
1.85V	243.2	145.5	96.6	73.7	59.1	50.8	43.1	35.7	29.9	25.0

Performance Curve

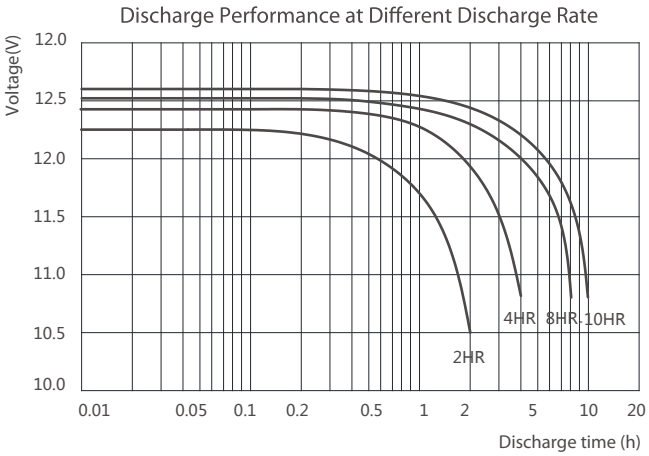

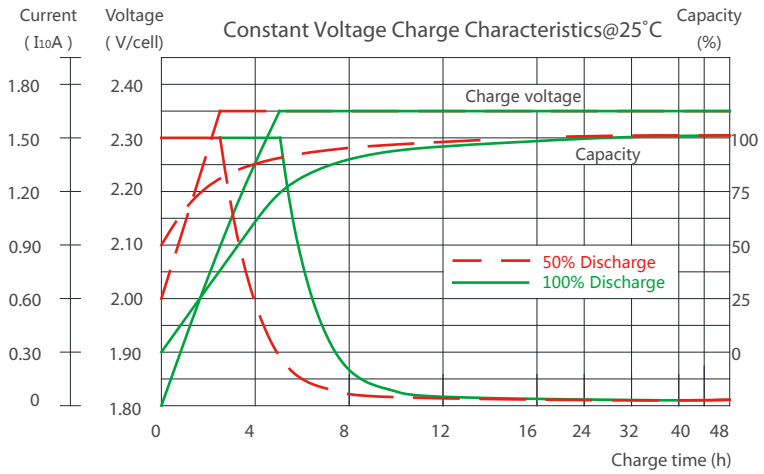

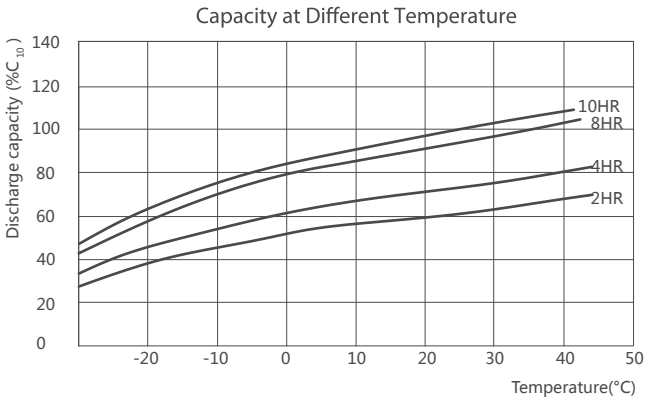

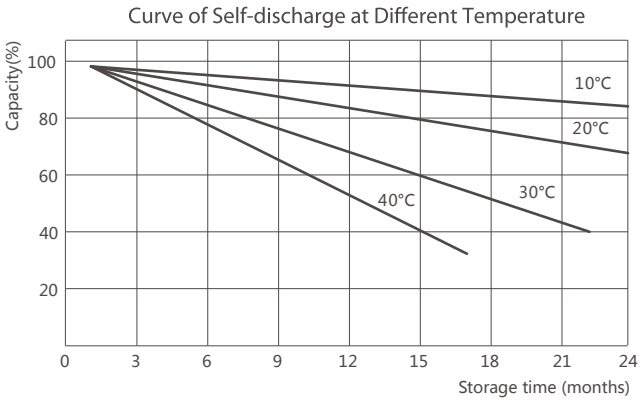

Declaration: This information is generally descriptive only and is not intended to make or imply any representation, guarantee or warranty with respect to any cells and batteries. Cell and battery designs/specifications are subject to modification without notice. Contact HELIOS for the latest information.

HELIOS
POWER SOLUTIONS